Carefully reworded reprint of a contribution to:
From Pixels to Features, J.C. Simon (ed.)
© Elsevier Science Publishers B.V. (North-Holland), 1989

A Dualistic View of Motion and Invariant Shape Analysis

Helmut GLÜNDER

Lehrstuhl für Nachrichtentechnik
Technische Universität München
Arcisstr. 21, D-8000 München 2
Federal Republic of Germany

A systematic procedure for the extraction of multiple-invariant shape descriptors is introduced that is based on generalised auto-correlation functions. It can be carried out in parallel processing networks that also serve the extraction of motion parameters by flow-field analysis. It is argued that this dualistic processing principle is neurobiologically relevant. Models of neural networks are presented and their properties in both modes are discussed.

1. INTRODUCTION

The extraction of invariant shape descriptors and the characterization of object and self-induced motion are essential for the successful behaviour of living beings in natural environments but they are also of increasing importance in the field of robotics. In this article it is argued that certain neural structures of the visual system are suited to jointly perform both tasks, depending on the stimulus: moving or nonmoving. The question arises, whether this putative biological solution – that may have evolved from the demand for neural self-organization – is also of some value for technical systems.

Differing from the original research that was aimed to explain multiple-invariant pattern recognition in the visual system this article starts with the introduction of a basic device that enables a neural network to perform both tasks: transformation-invariant shape description and object-independent motion analysis. After its introduction, the mathematical principles of both modes of parameter extraction are presented and exemplified by model networks for flow-field analyses and similarity-invariant shape descriptions.

2. ELEMENTARY MOTION DETECTOR

A variety of mechanisms for the detection and analysis of visual motion have been proposed (cf. the survey by Ruff *et al.* [1]). Most of them have their roots in the model circuit of a motion detector proposed by Hassenstein and Reichardt [2,3] for the insect eye. With the following assumptions it is sufficient to consider a simplified mechanism:

- It is applied to preprocessed image representations consisting of line-like patterns, i.e. pattern contours or skeletons.
- It is to work unidirectionally.
- It is velocity selective, i.e. it does not measure velocities but signals the presence of the velocity it is tuned to.

2.1 Dynamic Properties

Any elementary motion detector unit must perform at least a second order operation in space and time. More precisely, the temporal succession of signals at two points of the pattern representation must be compared (correlation). Figure 1a shows an idealised Hassenstein/Reichardt-detector (HRD) – that performs this task under the above mentioned conditions – together with a symbol-

ised stimulus. The detector unit is tuned to the velocity

$$\vec{v}_{\text{tune}} = \frac{\vec{\rho}}{\Delta T}\,, \tag{1}$$

i.e. for pattern points of the corresponding speed and direction the comparator "∘" delivers an output signal. With a multiplying comparator a unit's output signal is the product of the values at one or two pattern points (auto-correlation). For exotic stimuli, such as periodic patterns (e.g. gratings) that are translating in fronto-parallel planes HRD units may also signal multiples of the actual pattern velocity. However, pooled output signals of sets of equally tuned but spatially distributed HRD units – that are commonly considered for motion analysis – quite well reflect the velocities of real world objects.

In the following it is assumed that the tuning speed v_{tune} is determined by the spacing ρ of the HRD inputs or sensors. This kind of tuning is in accordance with the findings of van de Grind *et al.* [4] who showed in psychophysical experiments that the delay ΔT is indeed constant (typically: $\Delta T_{\text{human}} \approx 60\,\text{ms}$) for common speeds ($> 2°/\text{s}$). (Thus, one can suspect interneurons to be responsible for the delay. Furthermore and according to Koch and Poggio [5], the coincidence interval δT of the neural comparator is about 1% of ΔT.)

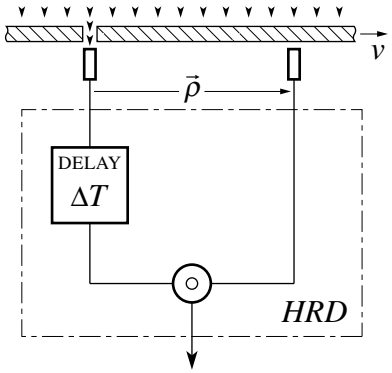

FIGURE 1a
Velocity selective (uni-directional) motion detector (HRD)

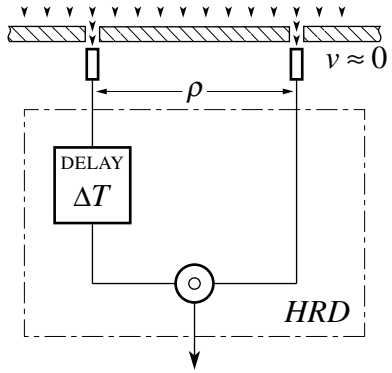

FIGURE 1b
Same detector signalling the presence of a (bi-directional) dipole relation of a static pattern ($t_{\text{rest}} > \Delta T$)

2.2 Static Properties

Besides their dynamic properties (spatio-temporal correlation) the here considered HRD units also perform spatial comparisons within static patterns, i.e. of patterns that are at rest for $t_{\text{rest}} > \Delta T$. This spatial auto-correlation mode is symbolised by Figure 1b. It will be demonstrated that *generalised auto-correlation functions* (generalised ACFs) of order two can be computed from pictorial patterns by this *dipole approach*, if

- large numbers of HRD units sample the image plane (a retinotopic representation),
- a proper range of tuning velocities is covered by HRD units at each location, and
- the HRD output signals are appropriately pooled.

The generalised auto-correlation analysis is the basis for a systematic approach to invariant shape descriptions of pictorial patterns.

Evidently, there is no explicit switching between the dynamic and static mode of analysis (dualism) – except by observer-induced motion (e.g. eye or body movements): the switching occurs if the relative motion between patterns and the image plane exceeds or falls below a minimum speed that is essentially determined by the spatial resolution ρ_{min} of the image representation.

3. GENERALISED AUTO-CORRELATION FUNCTION

The generalised ACF of order m of a pattern function $b(\vec{r}) \geq 0$ is mathematically defined [6,7,8] by

$$c(\vec{z}_1 \ldots \vec{z}_m) = \int \bigwedge_{i=1}^{m} \left[b\left(\mathcal{T}_i\{\vec{r}\} \right) \right] \mathrm{d}\vec{r} \qquad \text{with } \vec{r} = (x, y)^{\mathrm{T}}, \tag{2}$$

where $\bigwedge_{i=1}^{m}[\ldots]$ stands for a conjunctive operation on m terms (order m), e.g. the multiplication;

and $\mathcal{T}_i = \mathcal{T}(\vec{z}_i)$ indicates geometric transformations (mappings $\vec{r} \rightarrow \vec{r}'$) of the pattern function that are characterised by v-dimensional parameter vectors $\vec{z}_i = (z_{i1} \ldots z_{iv})^{\mathrm{T}}$.

If the inverse transformation $\mathcal{T}^{-1}$ exists, the generalised second order ACF can be written as

$$c(\vec{z}) = \int b(\vec{r}) \circ b\left(\mathcal{T}\{\vec{r}\}\right) \mathrm{d}\vec{r}, \tag{3}$$

where "$\circ$" denotes a conjunctive comparison operation. Equation (3) provides a rule for the extraction of pattern invariants under defined transformations. More precisely, the resulting coefficients express the degree of a pattern's transformation invariances: the distance or similarity between the transformed and the original pattern is determined according to a suitable measure. Generalised ACFs that depend on a single kind of geometric transformation $\mathcal{T}$ ($v = 1$) are by definition invariant under this kind of transformation, independent of its extent (inherent invariance). In general this holds neither if several types of transformations $\mathcal{T}$ are applied, nor for the invariance regarding several kinds of transformations. Given such cases, multiple-invariant intersections need to be determined from sets of coefficients of restricted invariance.

There are two methods for the computation of the generalised ACF: While the explicit transformation to pattern functions is straightforward, the approach using generalised dipole moments is perhaps less obvious. With the latter, values at pixel pairs that are related by the same parameter vector $\vec{z}$ (dipoles) are compared and summed. When confronted with static patterns this implicit analysis can be performed by suitably arranged HRD units: their output signals represent two-point relations that remain to be properly pooled.

4. FLOW-FIELD MOTION ANALYSIS

Ordered arrangements of HRD units, the inputs of which appropriately sample the image plane, can serve for the extraction of motion parameters. For this purpose flow-fields that are caused by projections of moving objects to an image plane are compared with models of vector-fields that are implemented as motion specific HRD configurations. Although in general the relative activation of differently structured and thus tuned model networks provides flow-field descriptors, in simple systems the detection of the best responding network may suffice. Advantages of this kind of motion analysis are its

- independence from the shape of the moving objects,
- tolerance concerning noisy flow fields, i.e. the ability to extract their dominant components,
- decomposition of complex flow fields according to the available vector-field models, and
- segmentation of moving objects by local analyses.

Two idealised examples of such flow-field analyses are presented:

- The monocular analysis of motion in depth of approximately planar objects that may occur, for instance, when moving through a forest while looking straight ahead.
- Rotatory motion in fronto-parallel planes, as it occurs, for instance, by bending the head to the shoulders.

4.1 Depth-Motion

Only a few principles of projective geometry are needed to understand the proposed depth-motion analyser. They are introduced by Figure 2 that represents a sectional view of an idealised pinhole-camera looking in the Z-direction. The projection centre is situated at $r = Z = 0$ and, for convenience, the image plane is assumed in front of it at $Z = L$ ("focal length"). With these conventions, the relation between the coordinates R and Z of an object point in the field of view and the coordinate r of its projection to the image plane is

$$r = \frac{L \cdot R}{Z} . \tag{4}$$

Obviously, position r not only depends on a point's distance Z but also on its position R referred to the line of sight (Z-axis). Consequently, any analysis of motion in Z that is directly based on Equation (4) is object-dependent. Conversely, any object-independent analysis must be based on the invariant quantity of depth-motion, namely the scale factor (object expansion or contraction)

$$s = \frac{Z_i}{Z_{i+1}} = \frac{r_{i+1}}{r_i} . \tag{5}$$

According to the investigations of Regan and Beverley [9] this applies to the human visual system as well. A network constructed from HRD units for the detection of the factors $s = 1.5$ and $s = 2.0$ is sketched beneath the r-axis in Figure 2. The scale factors defined between successive positions of object points in their projections are referred to the origin, e.g. to the centre of the "fovea", and the output signals of HRD units that are tuned to the same factor are summed. Each thus defined set of HRD units makes up a radially organised network. A reasonable analyser system can be estimated to consist of 50…100 networks tuned to scale factors that typically range from 1.01 to 4.0. A second stage of analysis selectively signals motion in depth which is achieved by HRD units that are tuned to the instantaneous temporal succession of scale factors that – for v_Z = const. – follows the hyperbolic law expressed by Equation (5).

$$s = 1 + \frac{\Delta T}{t} \tag{5a}$$

Hence, an active HRD unit in the second stage indicates a specific instantaneous "time-to-contact" (more precisely its inverse value), or – if the relative speed v_Z parallel to the line of sight is known – an object's distance Z.

Systems for analyses of depth-motion having vector-components in R-direction – i.e. of motion trajectories that, when projected to the image plane, intersect the line of sight at angles γ – are identically structured but centred extra-foveally on (fixed) points of radial coordinates

$$r = L \cdot \tan\gamma . \tag{6}$$

Such flow-fields can result from self-induced motion, if the line of sight does not coincide with the movement direction.

4.2 Fronto-Parallel Rotation

Analysers for front-parallel rotation are circularly organised and centred on the fixed points of rotation. Each system consists of isotropically organised networks around a common fixed point and tuned to a spectrum of angular velocities ω. Each network consists of concentric arrangements of HRD units with inputs on circles and separated by a common angle

$$\psi = \omega \cdot \Delta T . \tag{7}$$

To avoid "crosstalk" between systems of different fixed points the continuity of the activity of each system is again monitored by HRD units in a second stage.

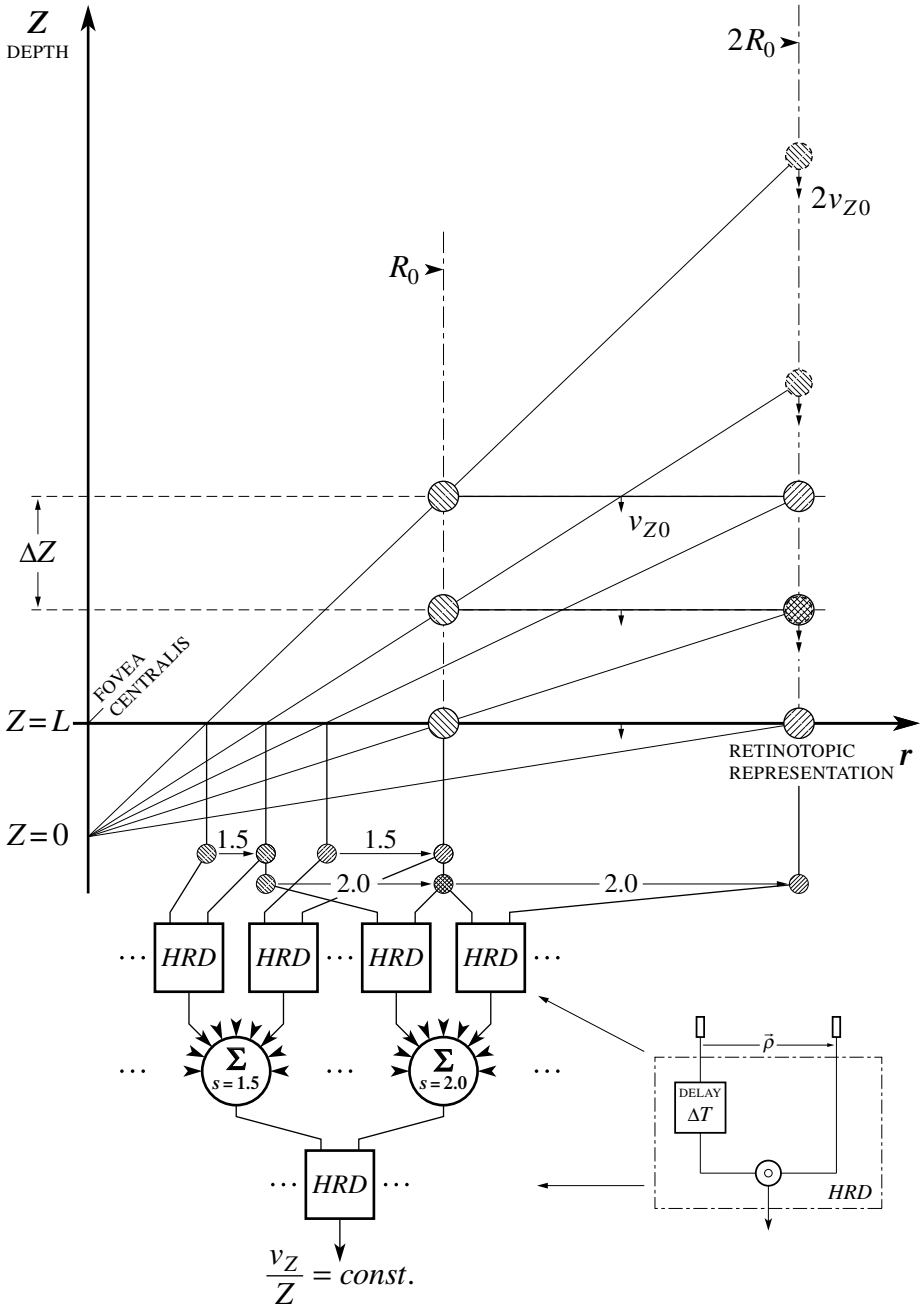

FIGURE 2

Central projection of two approaching (v_{Z0} = const.) particles (large hatched discs in solid circles) to the image plane at $Z = L$, shown at three moments separated by $\Delta T = \Delta Z / v_{Z0}$. Beneath the image plane is a partial view of a two-stage HRD-based network that serves the object-independent detection of the "time-to-contact". A third particle (hatched discs in dashed circles) at twice the distance and speed ($2v_{Z0}$ = const.) activates the same detector

5. INVARIANT SHAPE DESCRIPTORS FROM FLOW-FIELD ANALYSERS

In this section the extraction of two shape descriptor functions is exemplified that are invariant under all similarity transformations, i.e. rigid translations, scale changes, rotations and reflections (similarity-invariance). It is shown that the introduced flow-field analysers for depth-motion and fronto-parallel rotation provide appropriate structures for the evaluation of such multiple-invariant features. In what follows HRD units with multiplying comparators are assumed.

Figure 3 represents a partial view onto the image plane and a more elaborate first stage of a model network serving depth-motion analysis. The radial layout of integration areas (large white circles) of the HRD units (encircled letters) is centred on the fixed point of expansion or contraction, e.g. the fovea centralis. The sketched network is tuned to pattern expansions of $s = 1.5$ and differently tuned networks must be imagined as being superimposed. The spatial resolution decreases with eccentricity in order to keep the relative error constant. Furthermore, the analysis is carried out locally in overlapping radial subdivisions (bold frames) of a system's sectors (see Section 5.3).

The corresponding network structures of a system for the analysis of front-parallel rotation is straightforward.

5.1 Descriptor Function of Size Relations

In the static mode a complete and global analyser system composed of networks of the type shown in Figure 3 calculates the zoom-ACF

$$c_{s0}(s,\vec{r}_{f0}) = \int b(\vec{r}) \cdot b(\vec{r}/s)\,\mathrm{d}\vec{r}\ . \tag{8}$$

This generalised ACF depends on the scale factor s referring to the origin (fixed point $\vec{r}_{f0} = \vec{0}$). As mentioned in Section 3, it is size-invariant by definition and this inherent invariance is independent of the applied or implemented scale factors. In addition, the zoom-ACF is invariant under rotations around the fixed point and under reflections on axes passing through it.

To get rid of the limitation imposed by fixed points, i.e. of the missing shift-invariance, it is proposed to extract the similarity-invariant descriptor function

$$C_s(s) = \max_{\vec{r}_f}\left\{c_s(s,\vec{r}_f)\right\}. \tag{9}$$

Equation (9) presupposes a multitude of analyser systems that are centred on different fixed points. As outlined in Section 4.1, multiple systems are also required for the analysis of arbitrary depth-motion. The descriptor function indicates a pattern's maximum degree of self-similarity as a function of scale. Consequently and to mention the extremes, the descriptor does not depend on s for patterns consisting of straight lines that join or intersect at a common point, but it pronouncedly decreases $C_s(s \neq 1) \ll C_s(s = 1)$ for patterns made up of curved lines.

5.2 Descriptor Function of Angle Relations

In the static mode a complete and global system for the analysis of fronto-parallel rotation computes the rotation-ACF

$$c_{\psi 0}(\psi,\vec{r}_{f0}) = \int b(\vec{r}) \cdot b\left[r\cos(\varphi-\psi), r\sin(\varphi-\psi)\right]\mathrm{d}\vec{r} \tag{10}$$

$$\text{with } r = |\vec{r}| \text{ and } \varphi = \arg(\vec{r}).$$

This generalised ACF depends on rotations (angle ψ) around the fixed point $\vec{r}_{f0} = \vec{0}$. Like the zoom-ACF it is rotation and size-invariant, both referring to the fixed point and under reflections on axes passing through it.

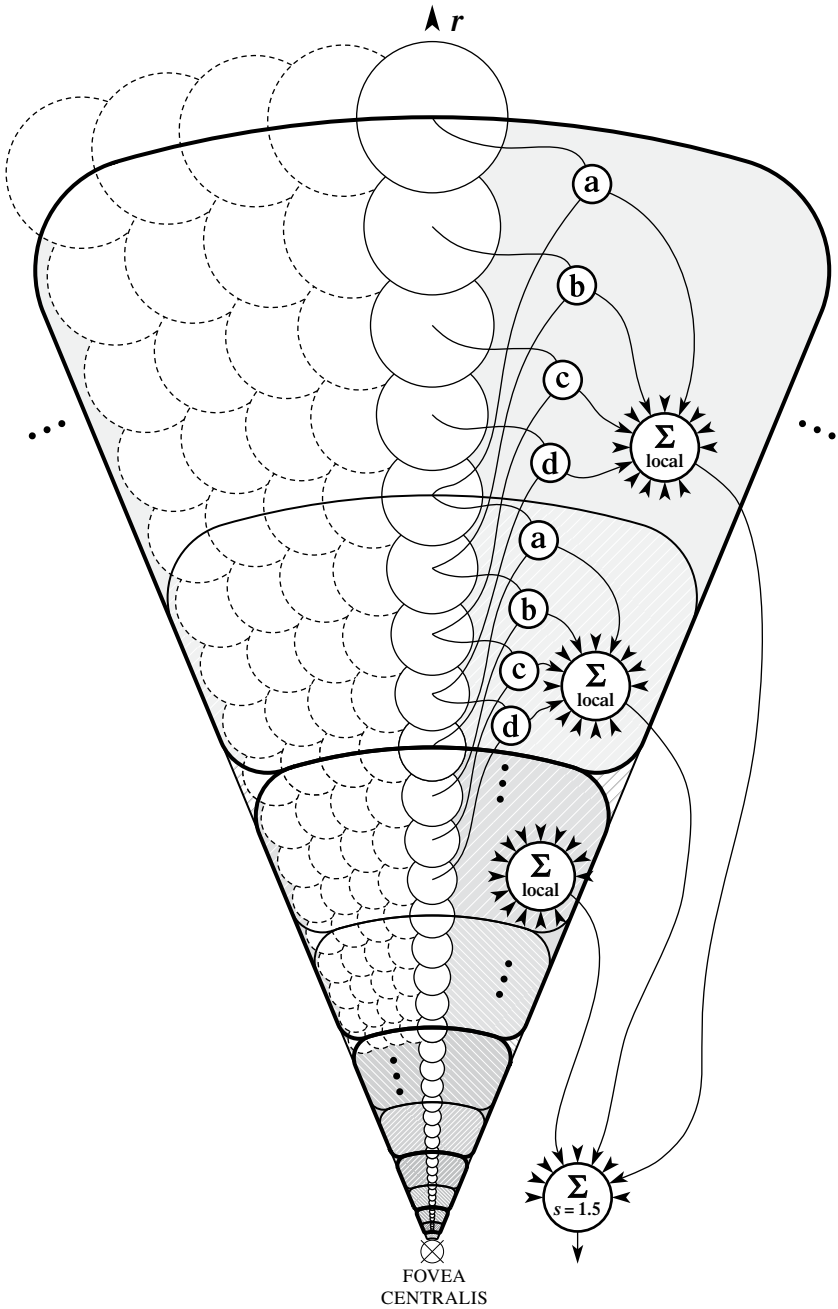

FIGURE 3

Top-view of a single sector of a radially subdivided network for the detection of pattern expansions by factor $s = 1.5$. Bold frames: overlapping local analysers (receptive fields of local summation units); encircled letters: HRD units (nonlinear subunits); white discs: integration areas of the HRD inputs

Again it is suggested to derive a similarity-invariant descriptor function

$$C_\psi(\psi) = \max_{\vec{r}_f} \left\{ c_\psi(\psi, \vec{r}_f) \right\}, \tag{11}$$

and again a multitude of analyser systems with different centres of rotation (fixed points) are required but are desirable for versatile motion analysis as well. The descriptor function reveals the maximum angular relations of a pattern. Consequently, a perfect circle is the only extended pattern for which the descriptor does not depend on ψ, and it is a periodic function for regular polygons or star-like patterns.

Further properties of both descriptor functions and of related descriptors are exemplified in [7] and in much greater detail in [10].

5.3 Local Analysis

The extraction of motion parameters by *local* flow-field analysis in subdivided networks can additionally provide estimates about the size of a moving object and about its position with regard to the vanishing-line, i.e. the line passing through the corresponding fixed point and the projection centre. Another reason for local analyses is the limited biological "fan-in" of the summation units: If comparisons are performed by nonlinear interactions of neighbouring dendritic synapses [5,11,12,13], the results of which (e.g., products) are summed at the soma of a single neuron, then at most the output signals of few thousands of HRD units may be pooled. Consequently and even if pattern representations of low spatial resolution are assumed, only rather small areas can be analysed by a single neuron, each consisting of hardly more than about 100×100 pixels.

Essentially two parameter-dependent conditions must be met by networks that locally compute generalised ACFs (e.g. see Figure 3):

- Each local area of analysis must at least permit twice the application of the considered transformation parameter.
- The overlap of areas must at least measure the single application of the considered parameter.

Regarding depth-motion systems this means local areas of minimum radial extent s^2 and two superimposed series of such areas that are radially shifted with respect to each other by the factor s. Rotation analysers require local areas of minimum circular extent 2ψ and two superimposed series that are rotated with respect to each other by ψ. Both kinds of systems may be subdivided in arbitrarily narrow sectors or rings respectively.

5.4 Fixed Point Descriptors

Finally two powerful invariant shape descriptors are to be mentioned. They characterize the configurations $f_s(\vec{r}_{\text{opt}})$ and $f_\psi(\vec{r}_{\text{opt}})$ that are made up by the optimum fixed points and their frequency of occurrence. These patterns can be constructed during the evaluation of the descriptor functions C_s and C_ψ, and they can replace the pattern function $b(\vec{r})$ in Equations (8) and (10) (hierarchical processing). The resulting features describe inner bindings of configurations of the optimum fixed points and thus they express abstract pattern properties, such as compactness and complexity [10].

6. BIOLOGICAL RELEVANCE AND IMPLICATIONS OF THE DUALISTIC PROCESSING PRINCIPLE

J.J. Gibson states [14]: "[The] essential structure consists of what is invariant despite the change." This dialectic view backs the presented dualistic approach but it also suggests a solution to the problem of system formation, because the self-organization of networks of the discussed kind is hopeless from the viewpoint of shape analysis alone. Systems serving motion analysis, however, are quite likely to develop through self-induced motion. In this respect, object-independence of motion analysis is an immediate consequence of the crucial rôle common properties of real world motion/movement-stimuli play for self-organization processes because the consolidation of synaptic interconnections requires highly repetitive stimulation and thus signal coincidences.

As discussed elsewhere [14,15,16], invariant shape descriptors are vital for creatures in natural environments. Advantages of the proposed kind of multiple-invariant descriptor functions are their descriptive power and their ability to express symmetries, congruences, similarities etc. of patterns, i.e. properties that belong to categories of (human) form perception known from Gestalt-psychology that can hardly be extracted by template matching techniques, integral transformations included. It is shown in [10] that none of the currently known methods of feature extraction show a comparable degree of biological plausibility.

Presently there is some biological evidence for the described processing concept: Various research groups have neurophysiologically identified systems for flow-field analyses of the discussed type in monkey and cat [17,18,19,20]. The spatio-temporal properties of receptive fields of formal neurons in the proposed networks agree well with measured ones [10]. Although the response of such brain areas to static stimuli have not been tested yet, some of the experimental data obtained by Price *et al.* [20] (cf. their Fig. 12c) conform with predictions made in [10]. Psychophysical investigations show that shape analysis of moving objects is impossible if pursuit (eye) movements are prevented [21]. Only recently and in a similar vein McLeod *et al.* [22] could demonstrate that the human visual system segregates randomly distributed displays of moving and nonmoving symbols in moving and static. Only then parallel shape analysis (cf. Treisman's paradigm) takes place in either group (preferably the moving) without being influenced by items in the other. Finally, the distribution of inter-saccadic fixation times is known to peak around 180 ms and to vanish for durations shorter than about 80 ms [23,24] which suggests the minimum amount of time required for shape analyses as being of the order of ΔT.

Motion analysis based on comparisons between flow-fields and structurally stored vector-fields (flow-field matching) explains a variety of psychophysical findings, such as cooperative motion, motion capture and related coherence effects, as well as motion segmentation [10]. The authors of a recently introduced computational principle [25] that is functionally similar to the proposed structural concept, reach comparable conclusions concerning motion perception.

Finally, it is noteworthy that networks of the kind sketched in Figure 3 that consist of formal neurons as summation units for thousands of (pair wise) nonlinearly interacting input signals (HRD units) conform with so-called subunits that are conjectured to constitute (complex) receptive fields [26,27]. The spatial resolution of such analyser networks can hardly be deduced from the size of the receptive fields of their neurons. To experimentally access and investigate single subunits, novel techniques are required. Moreover, it must be doubted that the conventional concept of receptive fields allows valid conclusions about the signal processing function of neurons in such networks.

7. CONCLUDING REMARKS

While the analysis of spatio-temporal patterns by two basic types of idealised systems was exemplified, analysers for more complex flow-fields – as they are caused by three-dimensional objects that arbitrarily move in space – in the static mode will result in affine or even projective ACFs from which the extraction of multiple-invariant shape descriptors is no longer as easy. However, tolerance with regard to small and local pattern deformations is obtained through the spatial averaging at the inputs of the HRD units (cf. Figure 3).

The concept of invariant descriptions by functionally grouped dipole relations of pictorial patterns is a model example for visual information processing at the *signal level* in biologically plausible structures: On one hand, parallel computing networks had to be developed that perform the operations formulated in Equations (8) and (10). On the other hand, self-organization of these networks – e.g. of the specific interconnections between HRD units and summation units – had to be considered. The eventual dualistic approach represents another example of fundamental differences between biological and technical solutions of information processing tasks.

ACKNOWLEDGEMENTS

I very much thank Helmut Platzer for encouragement and advice and Dr. Roger Watt for friendly support.

REFERENCES

[1] Ruff, P.I.; Rauschecker, J.P. and Palm, G., A model of direction-selective 'simple' cells in the visual cortex based on inhibition asymmetry, Biol. Cybern. **57** (1987) 147.

[2] Hassenstein, B. and Reichardt, W., Systemtheoretische Analyse der Zeit-, Reihenfolgen- und Vorzeichenauswertung bei der Bewegungsperzeption des Rüsselkäfers 'Chlorophanus', Z. Naturforschg. **11b** (1956) 513.

[3] Reichardt, W., Autokorrelations-Auswertung als Funktionsprinzip des Zentralnervensystems (bei der optischen Bewegungswahrnehmung eines Insektes), Z. Naturforschg. **12b** (1957) 448.

[4] Grind, W.A. van de; Koenderink, J.J. and van Doorn, A.J., The distribution of human motion detector properties in the monocular visual field, Vision Res. **26** (1986) 797.

[5] Koch, C. and Poggio, T., A theoretical analysis of electrical properties of spines, Proc. R. Soc. Lond. B **218** (1983) 455.

[6] Glünder, H.; Gerhard, A.; Platzer, H. and Hofer-Alfeis, J., A geometrical-transformation-invariant pattern recognition concept incorporating elementary properties of neuronal circuits, in: Wein, M. (ed.), *Proc. 7th Int. Conf. on Pattern Recognition, vol. 2* (IEEE Comp. Soc. Press, Washington/DC, 1984) pp.1376-1379.

[7] Glünder, H., Invariant description of pictorial patterns via generalized auto-correlation functions, in: Meyer-Ebrecht, D. (ed.), *ASST '87, 6. Aachener Symposium für Signaltheorie* (Springer, Berlin, 1987) pp.84-87.

[8] Strube, H.W., A generalization of correlation functions and the Wiener-Khinchin theorem, Signal Processing **8** (1985) 63.

[9] Regan, D. and Beverley, K.I., How do we avoid confounding the direction we are looking and the direction we are moving? Science **215** (1982) 194.

[10] Glünder, H., *Invariante Bildbeschreibung mit Hilfe von Autovergleichs-Funktionen* (Doctoral Dissertation, Technische Universität München, 1988) available from the author.

[11] Rall, W., Theoretical significance of dendritic trees for neuronal input-output relations, in: Reiss, R.F. (ed.) *Neural Theory and Modeling* (Stanford Univ. Press, Palo Alto/CA, 1964) pp.73-97.

[12] Poggio, T. and Torre, V., A new approach to synaptic interactions, in: Heim, R. and Palm, G. (eds.) *Theoretical Approaches to Complex Systems* (Springer, Berlin, 1978) pp.89-115.

[13] Koch, C.; Poggio, T. and Torre, V., Retinal ganglion cells: a functional interpretation of dendritic morphology, Phil. Trans. R. Soc. Lond. B **298** (1982) 227.

[14] Gibson, J.J., *The ecological approach to visual perception* (Houghton Mifflin, Boston/MA, 1979)

[15] Glünder, H., On functional concepts for the explanation of visual pattern recognition, Hum. Neurobiol. **5** (1986) 37.

[16] Glünder, H., Relational processing: a concept for the explanation of invariant visual pattern recognition, in: Marko, H.; Hauske, G. and Struppler, A. (eds.) *Processing Structures for Perception and Action* (VCH, Weinheim, 1988) pp.39-77.

[17] Sakata, H.; Shibutani, H.; Kawano, K. and Harrington, T.L., Neural mechanisms of space vision in the parietal association cortex of the monkey. Vision Res. **25** (1985) 453.

[18] Motter, B.C. and Mountcastle, V.B., The functional properties of the light-sensitive neurons of the posterior parietal cortex studied in waking monkeys: foveal sparing and opponent vector organization, J. Neurosci. **1** (1981) 3.

[19] Rauschecker, J.P.; Grünau, M.W. von and Poulin, C., Centrifugal organization of direction preferences in the cat's lateral suprasylvian visual cortex and its relation to flow field processing, J. Neurosci. **7** (1987) 943.

[20] Price, D.J.; Zumbroich, T.J. and Blakemore, C., Development of stimulus selectivity and functional organization in the suprasylvian visual cortex of the cat, Proc. R. Soc. Lond. B **233** (1988) 123.

[21] Röhler, R. and Krämer, E., Recognition of moving structures that are masked by windows, Perception **15** (1986) A21.

[22] McLeod, P.; Driver, J. and Crisp, J., Visual search for a conjunction of movement and form is parallel, Nature **332** (1988) 154.

[23] Gaefke, H., *Die Intervallverteilung der raschen Augenbewegungen des Menschen beim optokinetischen und vestibulären Nystagmus und bei Bildbetrachtung*, (Doctoral Dissertation, Universität Freiburg i. Br., 1968)

[24] Harris, C.M.; Hainline, L.; Abramov, I.; Lemerise, E. and Camenzuli, C., The distribution of fixation durations in infants and naive adults, Vision Res. **28** (1988) 419.

[25] Yuille, A.L. and Grzywacz, N.M., A computational theory for the perception of coherent visual motion, Nature **333** (1988) 71.

[26] Smith, R.A. and Cass, P., Facilitatory interactions between flashed lines, Perception **15** (1986) 443.

[27] Emerson, R.C.; Citron, M.C.; Vaughn, W.J. and Klein, S.A., Nonlinear directionally selective subunits in complex cells of cat striate cortex, J. Neurophysiol. **58** (1987) 33.