ELECTRO-OPTICS/LASER INTERNATIONAL '80 UK

Brighton 25 – 27 March 1980

CONFERENCE PROCEEDINGS

Edited by H.G. Jerrard

Conference organized by Kiver Communications Ltd

IPC Science and Technology Press

Reprinted – with inserted original halftone images – from
Jerrard H.G. (ed.) (1980) Proceedings of the Electro-Optics/Laser International '80 UK.
IPC Science and Technology Press, Guildford/UK, pp. 66-75.

A HIGH PRECISION 2D SIGNAL ANALYSIS, PERFORMED COHERENT OPTICALLY AS A PRECEDING STEP IN PICTURE DEBLURRING

H. Platzer, H. Gluender

Institut fuer Nachrichtentechnik, Technische Universitaet Muenchen FRG

In order to restore a blurred and noisy image a filter must be constructed. This requires estimates of the blurring function and the S/N ratio. A procedure has been worked out which gives S/N estimates in practical cases. This signal analysis is performed coherent optically with very high precision and uses the information contained in the power spectra of the relevant image details. This paper concentrates on the practical solution of this analysis and is illustrated by actual data results. Topics such as window functions, γ-correction, scanning devices and special optical setups are treated in detail.

INTRODUCTION

An old Chinese proverb and modern information theory teach us that a picture is worth more than a thousand words. This is essentially true assuming the picture show the beauty of a flower, the wildness of a landscape or the expression on a human face.

There are also cases, where we have to base decisions on the content of a picture, which could be described by few words or figures. For example the distance between two cars in a picture is 21m ± 0.5m; the orientation of a contour is $26^{\circ} \pm 3.5^{\circ}$ or the facial description parameters of the man near the door are 75 ± 2, ... and 50 ± 1. Then the decisions could be as follows: the distance between the two cars was below 25m, the inclination of the ramp was more than 20° and that notorious Stinky Miller was hanging around near the entrance to the bank.

A common feature of these three examples is the need to extract the numerical value of geometrical parameters from an image and to specify their uncertainty.

In general, photographic pictures suffer from some blurring and from silver grain noise. The art of image restoration was established to make the best out of such degraded images [1,2]. The purpose of this paper is to show how the signal analysis, which must always precede the restoration, can be carried out coherent optically with high precision.

THEORY

The need for signal analysis

Restoring blurred images without regard to noise may lead to even worse pictures than the original blurred ones. This happens because of structures arising from amplified and filtered noise. If we want to extract certain geometric parameters out of images then these mislead-

ing structures will cause false results. Therefore it is worthwhile evaluating whether or not a restored picture allows us to measure the parameters with the desired accuracy and confidence.

Photographic recording as an information channel

The method of acquiring the photograph of a light-intensity distribution could be described as an information channel. The following simple model contains the principal effects:

1) the intensity distribution (ideal image) $i(x,y)$ in the film plane is convoluted with a blurring function due to the optical transfer function (OTF) of the imaging-optics, defocussing or movement during exposure, etc.,
2) the analog values of the blurred image are represented as spatial rates of quantum events which result in Poisson noise,
3) the picture undergoes a nonlinear operation due to photographic emulsion and developer, which are both characterized by the HD curve.

In most cases further simplifications are possible:

1a) the blurring function $b(x,y)$ is space invariant,
2a) the signal dependent Poisson noise is approached by added white noise $n(x,y)$ (this holds for low contrasts, which is always the case when heavy blurring occurs),
3a) the HD curve is substituted by the well-known γ (this holds for expositions of image details lying within the linear part of the HD curve).

Fig.1 shows a diagram of the channel (capital letters are used for its description in the spatial frequency domain). The output of the channel is the light intensity distribution $d(x,y)$ behind the exposed, developed and illuminated photographic negative ($\gamma > 0$).

Image restoration

The underlying principle of image restoration is to perform the inverse operations in the opposite direction. This means:

4) γ-correction, $\{(\ldots)^{-\gamma}\}^{-1/\gamma} = (\ldots)$;
5) deconvolution (inverse filtering), but no noise compensation

because noise-subtraction is impossible due to the lack of knowledge about its exact function. Fig.2 shows how the restored image $r(x,y)$ is to be obtained. The restored image $r(x,y)$ differs from the ideal one $i(x,y)$ by the term $n * \frac{\delta}{b}$ which will generally be more than the difference between the degraded image $d(x,y)$ and the ideal one. (Definition: $\frac{\delta}{b} * b = \delta$, a notation introduced by J.Hofer[3])

Noise considerations

If we agree that the distance between the ideal image and the result of the restoration is given by the square root of the integral over the squared differences (which is a common metric), then the expected value of this distance can be minimized if the inverse filter is corrected by the Wiener factor W. This is given by the expression $W = S^2/(S^2 + N^2)$ [4]; (S^2: power spectrum of the signal, N^2: power spectrum of the noise). In our case W is given by:

$$W(f_x,f_y) = \frac{|I|^2}{|I|^2 + \left|\frac{N}{B}\right|^2} = \frac{1}{1+\frac{|N|^2}{|I\cdot B|^2}} \quad ; \qquad \left\{\begin{matrix} S = I\cdot B \\ N = N \end{matrix}\right\}$$

For $S/N \gg 1 \Longrightarrow W \approx 1$ and
for $S/N \ll 1 \Longrightarrow W \approx \frac{|I\cdot B|^2}{|N|^2}$;

The Wiener-corrected, optimum restoration filter has

$$O(f_x,f_y) = W(f_x,f_y) \cdot \frac{1}{B(f_x,f_y)} \quad ;$$

as system function [5].

We realize that for an exact Wiener-corrected inverse filtering it is necessary to know the power spectra of the relevant part of the image $|I\cdot B|^2$ and of the noise $|N|^2$. Far more important, however, is that when these power spectra are known we can decide whether the restored image will allow us to perform the required measurements. Because the Wiener factor will decrease for low S/N the optimum restoration filter will also practically cut off the signal at frequencies for which the S/N ratio is much smaller than one. Consequently in the case of common signals frequencies above an upper spatial frequency (global low pass characteristic) are suppressed. Therefore the limitation of the measurements of geometric parameters is given: either they are impossible because of severe lack of resolution (effect of the low pass characteristic) or they are possible and we can estimate the uncertainties. It is important to note that these statements can be made before the difficult inverse filtering, and in fact without any knowledge of the blurring function. On the other hand incorrect filtering (wrong or missing Wiener factor) applied to the degraded picture will cause misleading results.

Estimation of the cut off frequencies

Obviously it is impossible to evaluate the power spectrum of the signal $|I\cdot B|^2$ from the degraded image without any a priori knowledge. Only the measurements of the following spectral power densities can be realized:

> $|I\cdot B|^2 + |N|^2$ of the interesting parts of the image (signal) and $|N|^2$ which can be measured from parts of the picture which carry no modulation but have the same density of the parts under consideration.

For all frequencies where $S^2 + N^2$ is not significantly higher than N^2 we must conclude that it is highly probable that S^2 is significantly small compared with N^2. For

$$|I\cdot B|^2 + |N|^2 \simeq |N|^2$$

it follows that

$$|I\cdot B|^2 \ll |N|^2$$

and

$$W \simeq |I\cdot B|^2 / |N|^2 \approx 0 \quad ;$$

Therefore the required measurements in general may only be based on frequencies smaller than those defined by $|I \cdot B|^2 + |N|^2 \simeq |N|^2$.

Measurement of the spectral power densities

As we want to get the spectrum of $(i * b + n)$ and not of $d = (i * b+n)^{-\gamma}$ we have to compensate for γ by copying the picture whilst carefully choosing the exposition and development parameters (γ-correction was first recognized as being necessary in image deconvolution by G.W. Stroke). The desired γ_c for the copying procedure is given by the equation

$$\gamma_c = 2/\gamma \quad \text{which follows from the requirement} \quad \gamma_c \cdot \gamma = 2$$

because we use a coherent optical processor which computes using light amplitudes and not light intensities.

Fig.3 shows the whole chain of recording and processing steps. For the most accurate results the copying transfer function C should be reasonably flat over the frequency range $(C(f_x, f_y) \approx 1)$ in question and the film grain noise of the copying emulsion n_c should be negligible compared with that of the degraded picture $(n_c \ll n)$.

An important aspect of the sketched arrangement is the selection of an adequate window function a which should permit only those details under consideration to pass and, on the other hand, should guarantee a good frequency resolution. These two requirements in general are contradictory, the first leading to a small window, the second to a wide one. A rotational Gauss function has proved to be the best compromise.

The amplitude distribution in the frequency plane may be scanned with a linear photoelectric device yielding a voltage function proportional to the intensity distribution along the scanning path.

TECHNICAL IMPLEMENTATION

This part of the paper shows how the different processing steps can be realized. For convenience we present real data to illustrate this point. The presented material stems from investigations performed to determine the spatial orientation of a cube-shaped piece of machinery. A blurred photograph of the whole machine and the film type were the only data available. The part in question measured about 0.2mm in diameter and was therefore heavily disturbed by the coarse film grain. The average density of this image area turned out to lie within the linear part of the HD curve. Therefore, because of the low contrast it was possible to compensate the nonlinearities of the film by γ-correction.

γ-correction

In order to meet the requirements stated in the theoretical section the copying was performed by an excellent incoherent imaging system which guaranteed a flat OTF over the appropriate frequency range and allowed the magnification of the image by a factor of 6. This and the use of a holographic emulsion with an ultrafine grain (Agfa Holotest 10E 75 plate) made copy-noise negligible[6]. The condition $\gamma_c \cdot \gamma = 2$ (γ was taken from the data sheets of the film manufacturer) was fulfilled by carefully controlling the exposure time, the dilution of the developer (G3p, Agfa) and the developing time. The achieved γ_c could be measured by a grey-scale which was copied together with the original data.

Coherent optical Fourier transformation

Window function. The Gauss characteristic of the laser beam served as window function. Fig.4a shows the sectional plot of the beam intensity in space domain. The 1/2-amplitude diameter was set at $\approx$1.6mm because the object-diameter's being $\approx$1.2mm.

Laser-beam expansion. The basic philosophy of the coherent optical setup was to avoid as many optical elements after the pinhole as possible. The first step was, not to insert a photographic apodisation function as window, but to use the laser beam itself. The second step was to use one lens instead of separate collimator and Fourier lenses. Therefore, the object plane was in the converging beam causing a spherical phase in the frequency plane which did not disturb because of quadratic detection and a negligible phase error in the object plane. Fig.4b shows a diagram of the optical setup.

Liquid gate. The γ-corrected copy on the holographic plate was combined with a plane plate to form a liquid gate. This was necessary to avoid phase errors by the relief of the photographic emulsion. Dimethyl phthalate served as matching medium. It is highly recommended that photo emulsion on glass substratum be used because of its optimal noise performance [7]. The liquid gate sandwich was installed on a xy-translator and slightly tilted in order to avoid reflections between the object and lens L_3.

Fourier transformation. The effective focal length (distance between the object plane and the focal plane of lens L_3) was set as large as possible in order to get convenient scale factors in the frequency plane. ($u = f_x \cdot \ell \cdot \lambda$; u = coordinate in the frequency plane[mm], f_x: spatial frequency[mm^{-1}], ℓ : effective focal length[m], λ : wave length [μm])

An effective focal length of 3.47m results in a scale factor of 2.2mm for a frequency of $1mm^{-1}$ (λ = 633nm)

To demonstrate the processor's accuracy we show how the spectrum of a vertical slit $\{sinc(x)\}^2$ looks like (fig.5) around its 340th maximum.

Spectral measurement

Measurements were made by scanning the Fourier plane in parallel lines and plotting the power density averaged over a disc with a $0.09mm^{-1}$ diameter. For this purpose we used a photodiode (PIN-040 B, United Detector Technology, Inc.) behind a pinhole with a diameter of 0.2mm, both mounted on a stepmotor driven xy-translator. The photodiode was connected to a high-precision low leakage, zero-ohm amplifier.

Fig.6 shows the coherent optical processor at the Institute of Communication Techniques at the Technical University Muenchen. Fig.7 shows a central scan (through f_x, f_y = 0) of a constant (no object).

Results

We recorded the following scans:

a) central scans through the power spectra of 8 different parts of the picture which carried no modulation (noisy constant) and were of the same density as the average density of the object (Fig.9). This was for the evaluation of the noise power density. (A typical spectrum of a noisy constant is shown in Fig.8.)

b) 7 parallel scans through the power spectrum of the object (Fig.11). (Fig.10 shows a photo of the noisy object spectrum with the scan traces)

Remark: The photographs of the spectra show a high point symmetry to the origin. This is a result of the excellent phase behaviour of the processor (real objects $\longrightarrow$ symmetrical power spectra; complex objects (phase errors) $\longrightarrow$ unsymmetrical power spectra).

We can draw the following conclusions from these results:

a) The magnitude of the spectral intensities of the object at frequencies higher than $2mm^{-1}$ are in the order of those caused by a noisy constant (4×10^{-5} times the value of the DC peak).

b) This means that $S^2 + N^2 \simeq N^2$ occurs at a spatial frequency of approximately $2mm^{-1}$.

c) A true resolution better than 0.17 mm ($f \approx 3mm^{-1}$), which would have been necessary for the statement on the orientation of the cube-like structure, is impossible to obtain even after deblurring.

CLOSING REMARKS

The signal analysis in the spatial-frequency domain, performed by means of a coherent optical processor allows useful insights into the properties of pictorial signals. The main reason for this is the high quality of the copy, and the ultimate precision of the liquid gate, the optics and the scanner-device (diode + amplifier).

ACKNOWLEDGEMENTS

The authors thank Prof.H.Marko and Prof.G.W.Stroke for very helpful discussions and advice.

REFERENCES

1 Stroke, G.W., Halioua, M., Thon,F.,Willasch,D.H.:'Image Improvement and 3D reconstruction using holographic image processing'. Proc.IEEE vol.65 (1977), no.1, pp.39-62.

2 Andrews,H.C.,Hunt,B.R.:'Digital Image Restoration'.Prentice-Hall Inc. Englewood Cliffs/N.J. (1977).

3 Hofer,J.:'Optical Reconstruction from Projections via Deconvolution.' Opt.Com., vol.29 (1979), no.1, pp.22-26.

4 Wiener,N.:'Extrapolation, interpolation and smoothing of stationary time series'. M.I.T. Press, Cambridge/Mass., (1949).

5 Stroke,G.W., Halioua,M.,Srinivasan,V.:'Holographic image restoration using Fourier spectrum analysis of blurred photographs in computer-aided synthesis of Wiener filters'. Physics Let.,vol.51A (1975), no.7, pp.383-385.

6 Biedermann, K.:'The scattered flux spectrum of photographic materials for holography'. Optik, vol.31, (1970), no.4, pp.367-389.

7 Smith, H.M.:'Light scattering in photographic materials for holography'. Applied Optics, vol.11 (1972), no.1, pp.26-32.

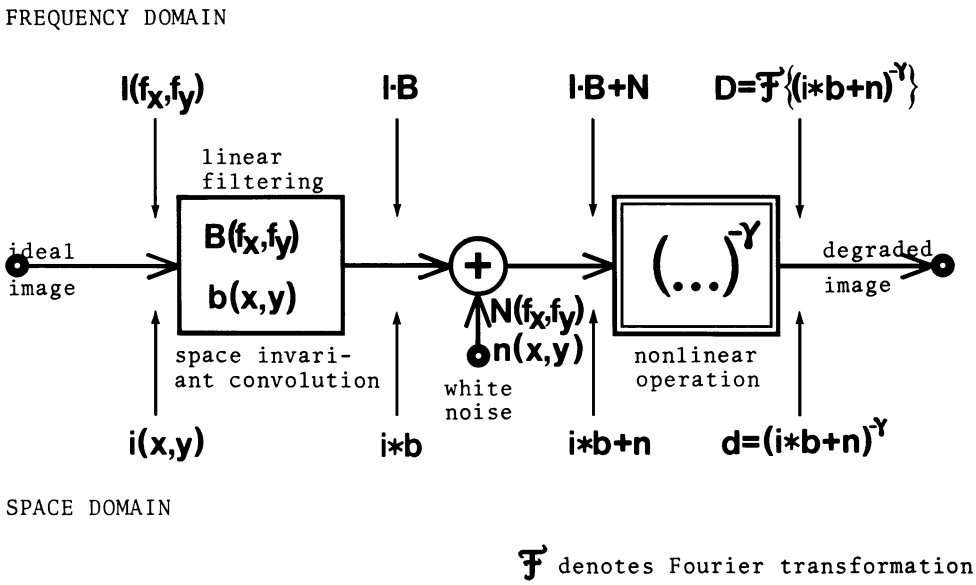

Fig. 1 Model of the information channel of photographic image generation

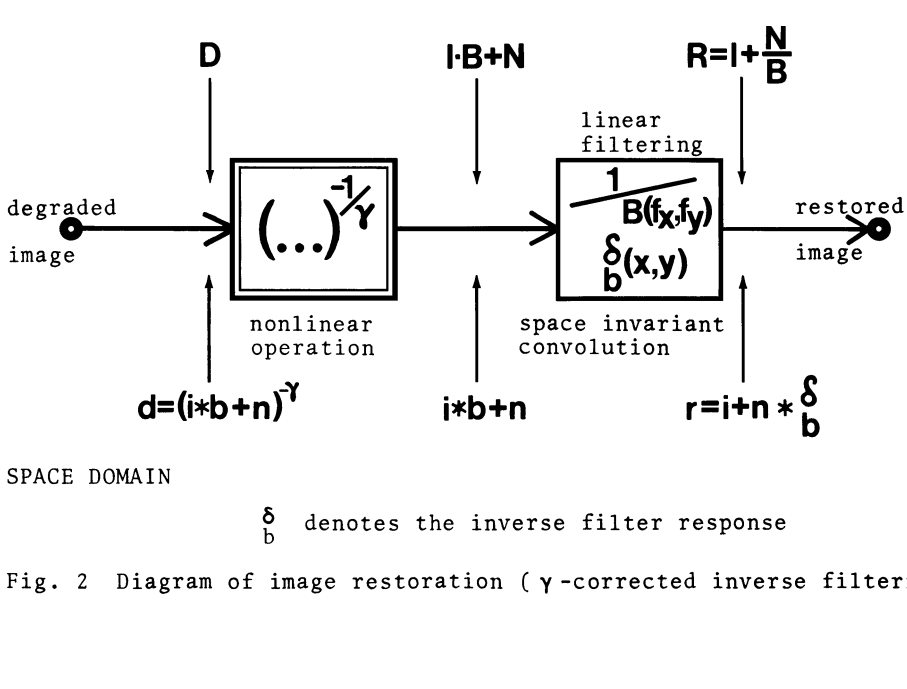

Fig. 2 Diagram of image restoration (γ-corrected inverse filtering)

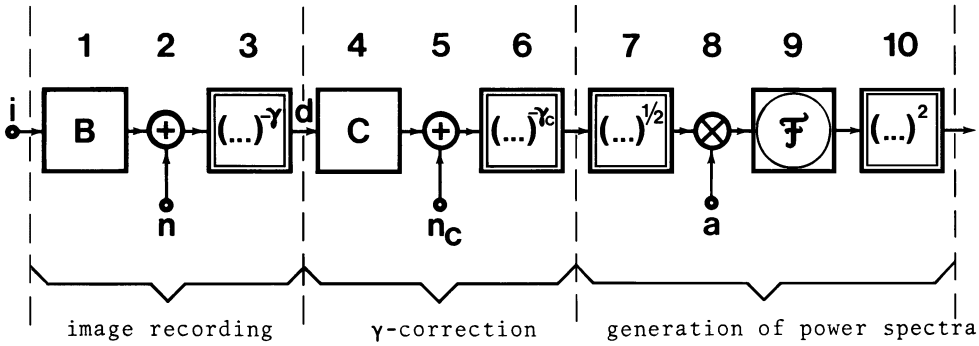

1 blurring function
2 film grain noise
3 film nonlinearity
4 transfer function of the copying process
5 copy-film grain noise
6 copy-film nonlinearity
7 intensity - amplitude conversion
8 window function
9 coherent optical performed Fourier transformation
10 square law detector

Fig. 3 Generation of power spectra of a γ-corrected, windowed pictorial signal d

4a

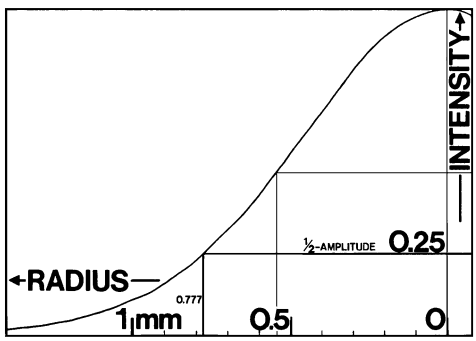

measured beam profile

4b

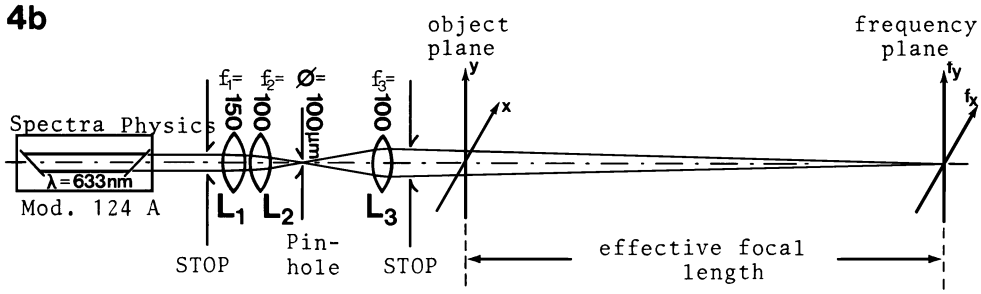

Fig. 4a Intensity of the laser beam in the space domain
b Coherent optical setup for high precision Fourier transformat.

The origin of the frequency plane is about 2.10m to the left in this scale.
(This scale refers to the printed book)

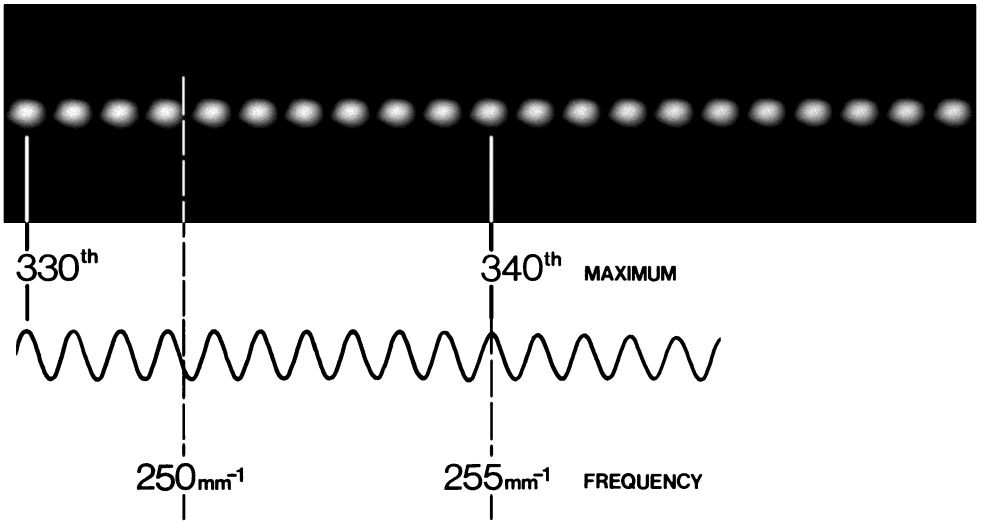

Fig. 5 Blown up part of the power spectrum of a vertical slit around the 340th maximum with scan measured along the f_x-axis

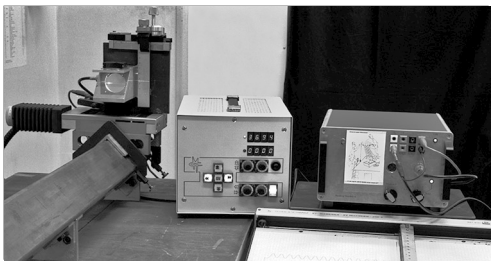

SCANNING DEVICE (frequency plane)

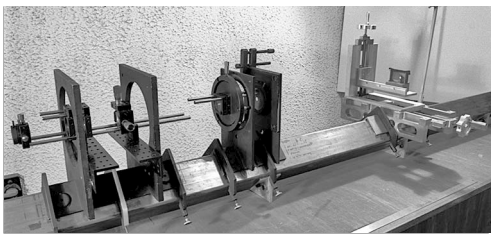

BEAM GENERATION AND SPACE DOMAIN

Fig. 6 Coherent optical processor

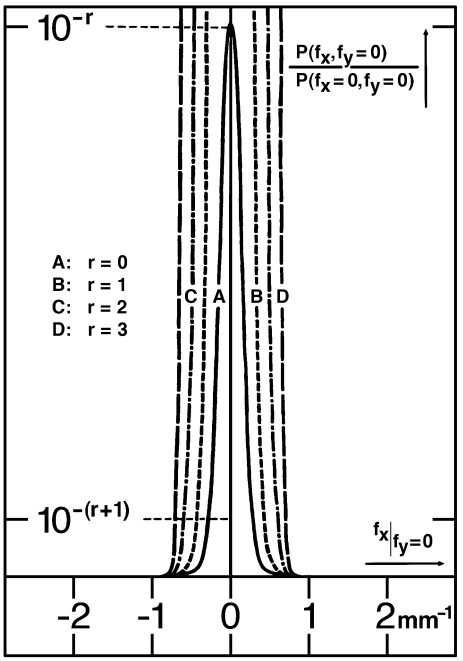

Fig. 7 Central spectral scans of a constant $\left(\mathcal{F}\{a(x,y)\}\right)^2$

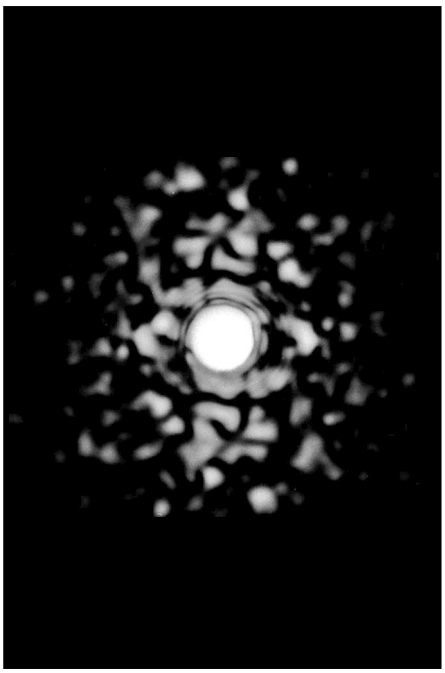

Fig. 8 Typical power spectrum of a noisy constant

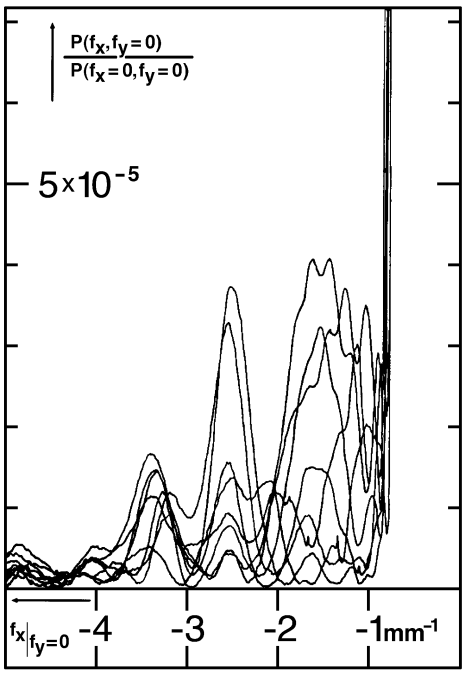

Fig. 9 Spectral scans of different noisy constants

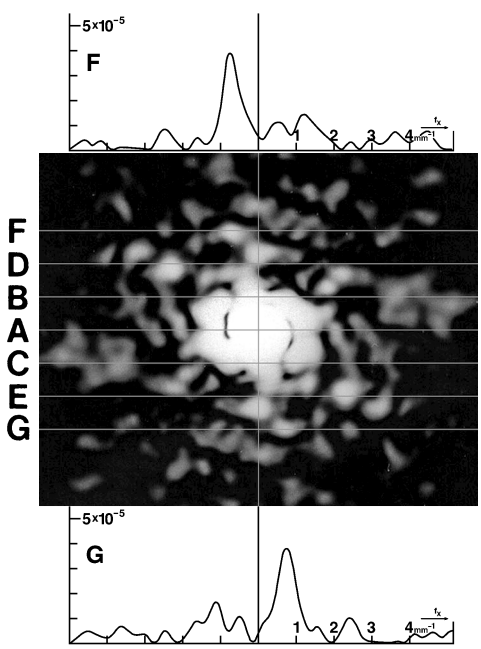

Fig. 10 Power spectrum of the noisy object

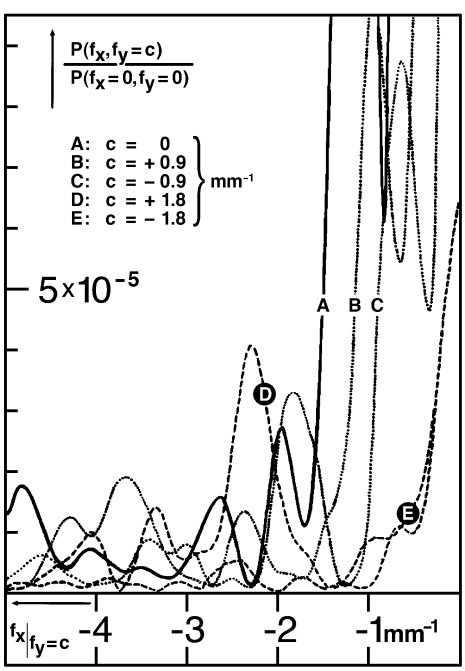

Fig. 11 Scans on parallel lines as indicated in Fig. 10